# NP Series - General purpose
# NP 7.2-12 (12v 7.2Ah)

RYOTA
The Power of Dragons

## Applications

- All purpose
- Uninterruptable Power Supply (UPS)
- Electric Power System (EPS)
- Emergency backup power supply
- Alarm and security system
- Communication power supply
- DC power supply
- Auto control system

## General Features

- 10 years design life(25℃)
- Special exhaust structure and sealing technology, safe and reliable ,flexible installation, convenient maintenance
- PbCaSn alloy for plate grids: less gassing , less self-discharging
- High quality AGM separator: extend cycle life and prevent micro short circuit
- High purity raw material: ensure low self discharge rate

## Standards

- Compliance with IEC 60896 standards, EU Battery Directive
- UL , CE Certified
- Manufactured in Leoch®IATF16949, ISO45001,ISO 9001 and ISO 14001 certified production facilities

## Specifications

| | | |
|---|---|---|
| Rated Voltage | | 12V |
| Nominal Capacity | 7.2 Ah | |
| Dimension | Length<br>Width<br>Container Height<br>Total Height | 151±2mm (5.95 inches)<br>65±1mm (2.56 inches)<br>93.5±1mm (3.68 inches)<br>93.5±1mm (3.92 inches) |
| Approx Weight | | 1.97kg (4.34 lbs) |
| Terminal | | T1/T2 |
| Container Material | | ABS |
| Rated Capacity (25℃) | 7.2 Ah<br>6.53 Ah<br>5.85 Ah<br>5.30 Ah<br>4.27 Ah | ( 20hr , 0.350 ,1.75V/cell)<br>( 10hr , 0.653A ,1.75V/cell)<br>( 5hr , 1.19A ,1.75V/cell)<br>( 3hr , 1.77A ,1.75V/cell)<br>( 1hr , 4.27A ,1.60V/cell) |
| Max. Discharge Current | | 105A (5s) |
| Internal Resistant (25℃) | | Approx 33mΩ |
| Operating Temp.Range | Discharge<br>Charge<br>Storage | -15~50℃ (5~122℉)<br>-20~40℃ (-4~104℉)<br>-15~40℃ (5~104℉) |
| Nominal Operating Temp.Range | | 25±3℃ (77±5℉ ) |
| Cycle Use | Initial Charging Current less than 2.1A. Voltage 14.4V~15.0V at 25℃ Temp. Coefficient -30mV | |
| Standby Use | Initial Charging Current less than 2.1A. Voltage 13.5V~13.8V at 25℃ Temp. Coefficient -20mV | |
| Effect of Temp. to Capacity | 40℃ (104℉)<br>25℃ ( 77℉)<br>0℃ ( 32℉) | 103%<br>100%<br>86% |
| Self Discharge | LP series batteries may be stored for up to 6 months at 25℃(77℉) and then a freshening charge is required For higher temperatures the time interval will be shorter | |

## Layout

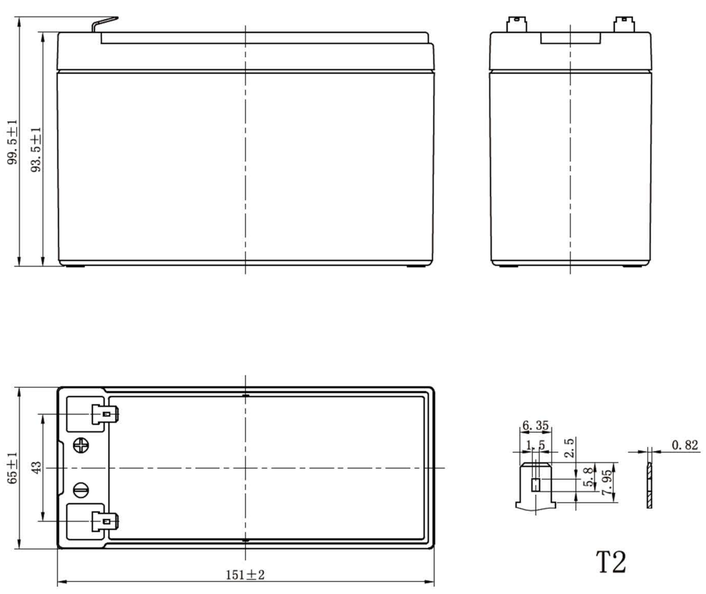


2022 RYOTA. All rights reserved.
Trademarks and logos are the property of RYOTA and its affiliates unless otherwise noted.
Subject to revisions without prior notice.

www.ryotapower.com

# NP Series - General purpose
# NP 7.2-12 (12v 7.2Ah)

RYOTA
The Power of Dragons

## Constant Current Discharge (Amperes) at 25°C (77°F )

| F.V/Time | 5min | 10min | 15min | 20min | 30min | 45min | 1h | 1.5h | 2h | 3h | 4h | 5h | 6h | 8h | 10h | 20h |
|---|---|---|---|---|---|---|---|---|---|---|---|---|---|---|---|---|
| 1.85V/cell | 17.0 | 12.5 | 9.90 | 8.10 | 6.12 | 4.64 | 3.91 | 2.90 | 2.38 | 1.72 | 1.36 | 1.16 | 0.99 | 0.780 | 0.637 | 0.343 |
| 1.80V/cell | 18.5 | 13.2 | 10.3 | 8.35 | 6.28 | 4.73 | 3.99 | 2.95 | 2.41 | 1.74 | 1.38 | 1.18 | 1.01 | 0.790 | 0.644 | 0.347 |
| 1.75V/cell | 19.9 | 13.8 | 10.7 | 8.60 | 6.43 | 4.83 | 4.06 | 3.00 | 2.45 | 1.77 | 1.40 | 1.19 | 1.02 | 0.800 | 0.653 | 0.350 |
| 1.70V/cell | 21.4 | 14.4 | 11.1 | 8.86 | 6.57 | 4.92 | 4.13 | 3.05 | 2.49 | 1.79 | 1.42 | 1.21 | 1.03 | 0.809 | 0.660 | 0.354 |
| 1.67V/cell | 22.3 | 14.8 | 11.3 | 9.01 | 6.67 | 4.98 | 4.17 | 3.08 | 2.51 | 1.81 | 1.43 | 1.22 | 1.04 | 0.816 | 0.665 | 0.356 |
| 1.60V/cell | 24.3 | 15.7 | 11.8 | 9.40 | 6.87 | 5.11 | 4.27 | 3.14 | 2.56 | 1.84 | 1.46 | 1.24 | 1.06 | 0.829 | 0.675 | 0.361 |

## Constant Power Discharge (Watts/cell) at 25°C (77°F )

| F.V/Time | 5min | 10min | 15min | 20min | 30min | 45min | 1h | 1.5h | 2h | 3h | 4h | 5h | 6h | 8h | 10h | 20h |
|---|---|---|---|---|---|---|---|---|---|---|---|---|---|---|---|---|
| 1.85V/cell | 32.3 | 23.9 | 19.1 | 15.6 | 11.8 | 9.01 | 7.61 | 5.67 | 4.65 | 3.37 | 2.69 | 2.29 | 1.96 | 1.55 | 1.27 | 0.686 |
| 1.80V/cell | 34.8 | 25.0 | 19.7 | 16.0 | 12.1 | 9.15 | 7.73 | 5.74 | 4.71 | 3.42 | 2.72 | 2.32 | 1.99 | 1.57 | 1.28 | 0.693 |
| 1.75V/cell | 37.4 | 26.1 | 20.3 | 16.4 | 12.3 | 9.30 | 7.84 | 5.82 | 4.77 | 3.46 | 2.76 | 2.35 | 2.01 | 1.58 | 1.29 | 0.700 |
| 1.70V/cell | 39.9 | 27.2 | 20.9 | 16.8 | 12.5 | 9.40 | 7.95 | 5.90 | 4.84 | 3.50 | 2.79 | 2.37 | 2.03 | 1.60 | 1.31 | 0.707 |
| 1.67V/cell | 41.4 | 27.8 | 21.3 | 17.1 | 12.7 | 9.50 | 8.02 | 5.95 | 4.87 | 3.53 | 2.81 | 2.39 | 2.05 | 1.61 | 1.32 | 0.712 |
| 1.60V/cell | 44.7 | 29.2 | 22.1 | 17.6 | 13.0 | 9.70 | 8.17 | 6.05 | 4.95 | 3.59 | 2.85 | 2.43 | 2.08 | 1.64 | 1.34 | 0.722 |

## Discharge Characteristics

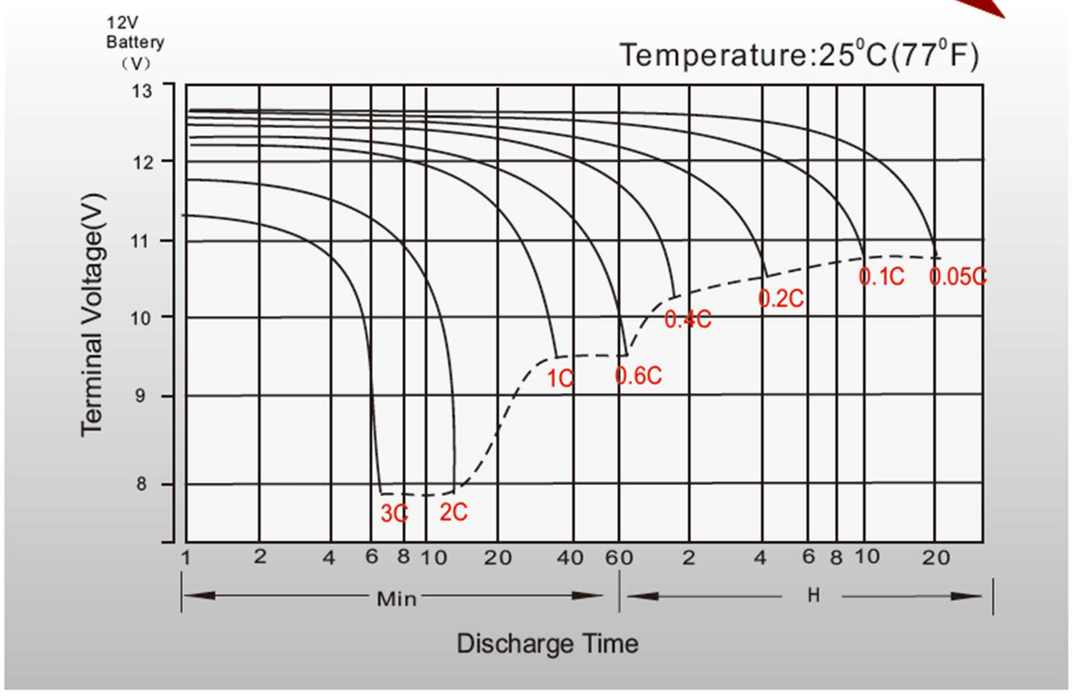


## Float Charging Characteristics

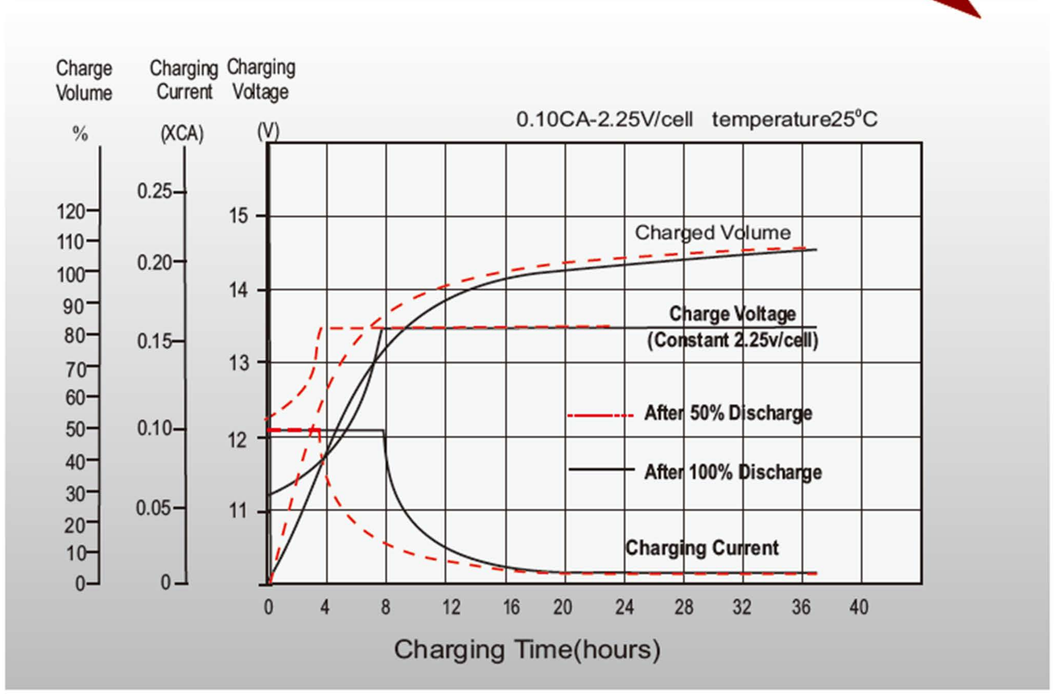


## Temperature Effects in Relation to Battery Capacity

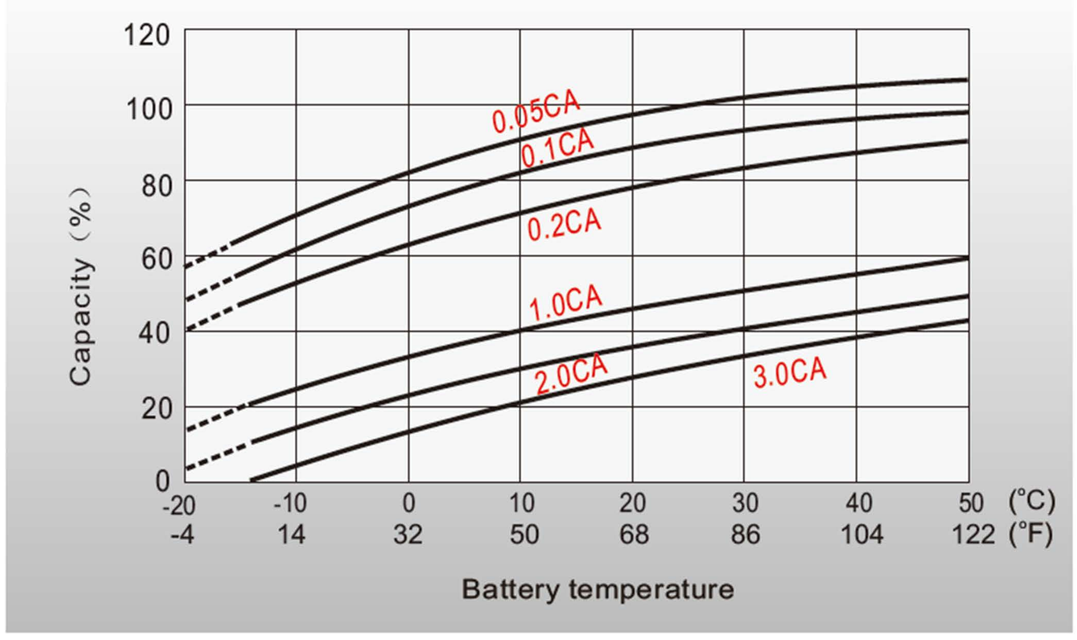


## Float Service Life

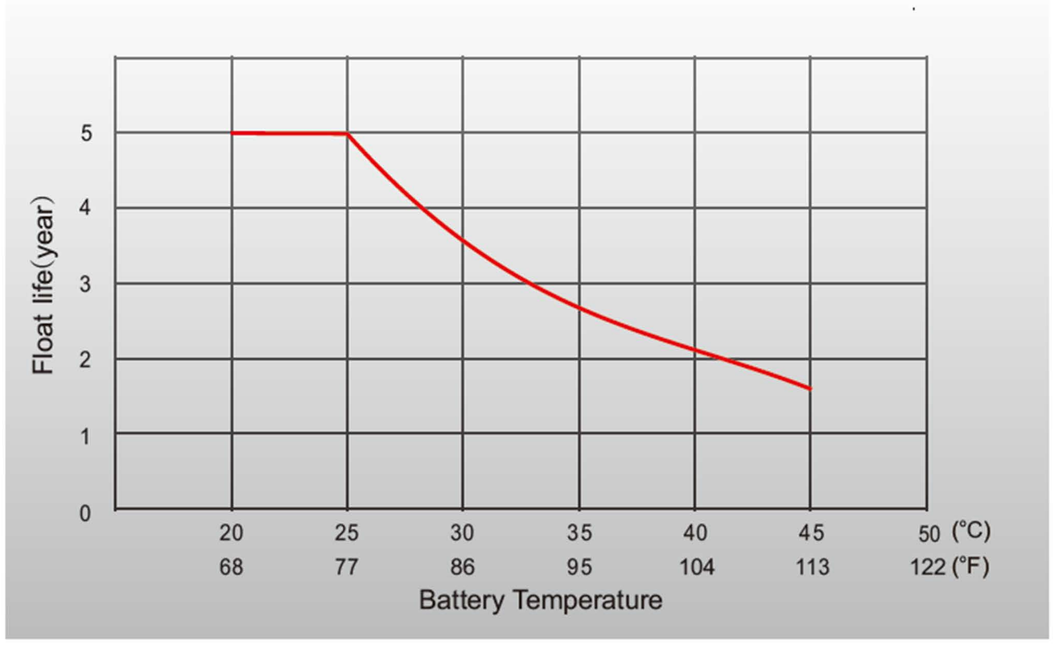


2022 RYOTA. All rights reserved.
Trademarks and logos are the property of RYOTA and its affiliates unless otherwise noted.
Subject to revisions without prior notice.

www.ryotapower.com