NP Series - Deep Cycle Solar
NP 65-12 (12v 65Ah)

RYOTA
The Power of Dragons

Applications

- Solar power (PV)
- Emergency backup power supply
- Uninterruptable Power Supply (UPS)
- Electric Power System (EPS)
- Alarm and security system
- Communication power supply
- DC power supply
- Auto control system

General Features

- 10 years design life(25℃)
- Special exhaust structure and sealing technology, safe and reliable ,flexible installation, convenient maintenance
- PbCaSn alloy for plate grids: less gassing , less self-discharging
- High quality AGM separator: extend cycle life and prevent micro short circuit
- High purity raw material: ensure low self discharge rate

Standards

- Compliance with IEC 60896 standards, EU Battery Directive
- UL , CE Certified
- Manufactured in IATF16949, ISO45001,ISO 9001 and ISO 14001 certified production facilities

Specifications

Rated Voltage		12V
Nominal Capacity	65.0 Ah	(C_{10} ,1.80V/cell)
Dimension	Length Width Container Height Total Height	348±2mm (13.7 inches) 167±2mm (6.57 inches) 178±2mm (7.01 inches) 178±2mm (7.01 inches)
Approx Weight		19.2 kg (42.3 lbs)
Terminal		M6
Container Material		ABS
Rated Capacity (25℃)	69.0 Ah 65.0 Ah 55.7 Ah 51.6 Ah 43.6 Ah	(20hr , 3.45A ,1.80V/cell) (10hr , 6.50A ,1.80V/cell) (5hr , 11.4A ,1.75V/cell) (3hr , 17.2A ,1.75V/cell) (1hr , 43.6A ,1.60V/cell)
Max. Discharge Current		650A (5s)
Internal Resistant (25℃)		Approx 7.0mΩ
Operating Temp.Range	Discharge Charge Storage	-15~50℃ (5~122℉) 0~40℃ (32~104℉) -15~40℃ (5~104℉)
Nominal Operating Temp.Range		25±3℃ (77±5℉)
Cycle Use	Initial Charging Current less than 19.5A. Voltage 14.4V~15.0V at 25℃ Temp. Coefficient -30mV	
Standby Use	Initial Charging Current less than 19.5A. Voltage 13.5V~13.8V at 25℃ Temp. Coefficient -20mV	
Effect of Temp. to Capacity	40℃ (104℉) 25℃ (77℉) 0℃ (32℉)	103% 100% 86%
Self Discharge	LP series batteries may be stored for up to 6 months at 25 C(77 F) and then a freshening charge is required For higher temperatures the time interval will be shorter	

Layout

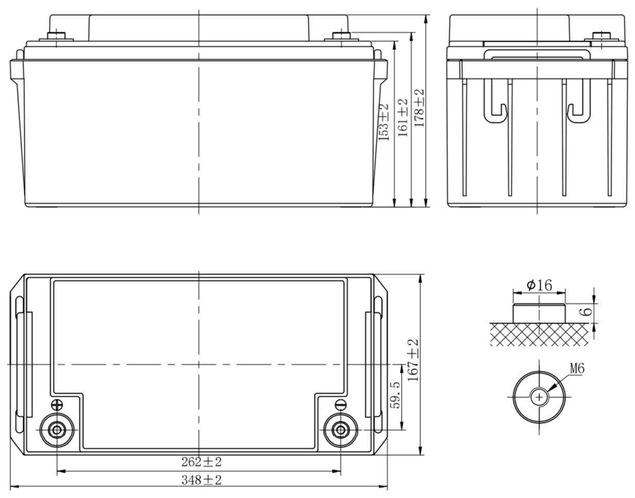

2022 RYOTA. All rights reserved.
Trademarks and logos are the property of RYOTA and its affiliates unless otherwise noted.
Subject to revisions without prior notice.

www.ryotapower.com

NP Series - Deep Cycle Solar
NP 65-12 (12v 65Ah)

RYOTA
The Power of Dragons

Constant Current Discharge (Amperes) at 25°C (77°F)

F.V/Time	5min	10min	15min	20min	30min	45min	1h	1.5h	2h	3h	4h	5h	6h	8h	10h	20h
1.85V/cell	135.3	101.0	84.1	70.7	54.3	40.5	34.2	25.7	20.6	15.5	12.4	10.3	8.96	7.29	6.09	3.27
1.80V/cell	157.7	119.1	97.8	81.4	61.4	45.3	37.9	28.1	22.4	16.8	13.3	11.1	9.61	7.80	6.50	3.45
1.75V/cell	172.1	127.7	103.5	85.5	64.2	47.2	39.3	29.0	23.1	17.2	13.7	11.4	9.82	7.94	6.60	3.49
1.70V/cell	186.4	136.2	109.4	89.9	67.0	49.0	40.7	30.0	23.8	17.7	14.0	11.6	10.00	8.08	6.70	3.53
1.67V/cell	194.6	141.2	112.8	92.5	68.7	50.1	41.6	30.6	24.2	18.0	14.2	11.8	10.20	8.17	6.76	3.56
1.60V/cell	214.5	152.8	120.9	98.5	72.6	52.7	43.6	31.9	25.2	18.7	14.7	12.1	10.40	8.36	6.91	3.62

Constant Power Discharge (Watts/cell) at 25°C (77°F)

F.V/Time	5min	10min	15min	20min	30min	45min	1h	1.5h	2h	3h	4h	5h	6h	8h	10h	20h
1.85V/cell	257.0	193.3	161.6	136.2	105.0	78.6	66.6	50.1	40.2	30.4	24.3	20.3	17.7	14.4	12.1	6.49
1.80V/cell	295.1	225.2	186.0	155.4	117.7	87.3	73.2	54.5	43.5	32.8	26.1	21.8	18.9	15.4	12.8	6.84
1.75V/cell	317.1	238.6	194.7	161.5	122.0	90.1	75.3	56.0	44.6	33.5	26.6	22.3	19.3	15.6	13.0	6.93
1.70V/cell	337.8	251.1	203.4	168.3	126.2	92.8	77.6	57.5	45.8	34.3	27.2	22.7	19.6	15.9	13.2	7.01
1.67V/cell	349.4	258.3	210.4	171.9	128.7	94.4	78.8	58.3	46.4	34.7	27.5	22.9	19.8	16.0	13.3	7.06
1.60V/cell	375.4	273.8	219.5	180.2	134.2	98.2	81.9	60.4	48.0	35.8	28.3	23.5	20.3	16.3	13.6	7.17

Discharge Characteristics

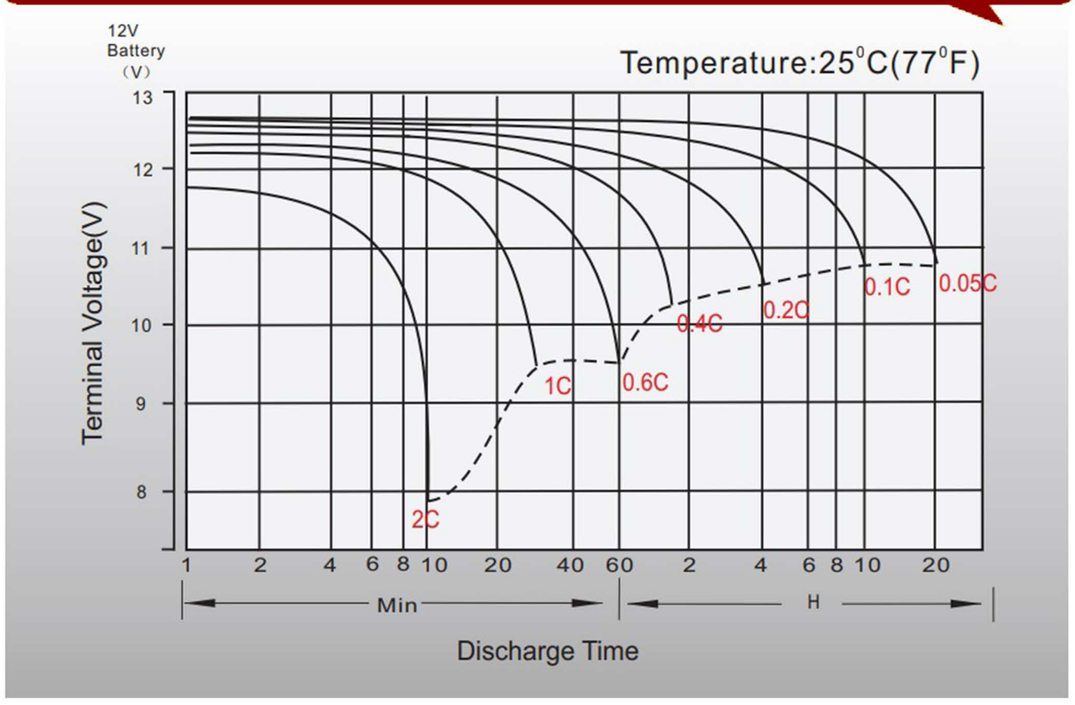

Float Charging Characteristics

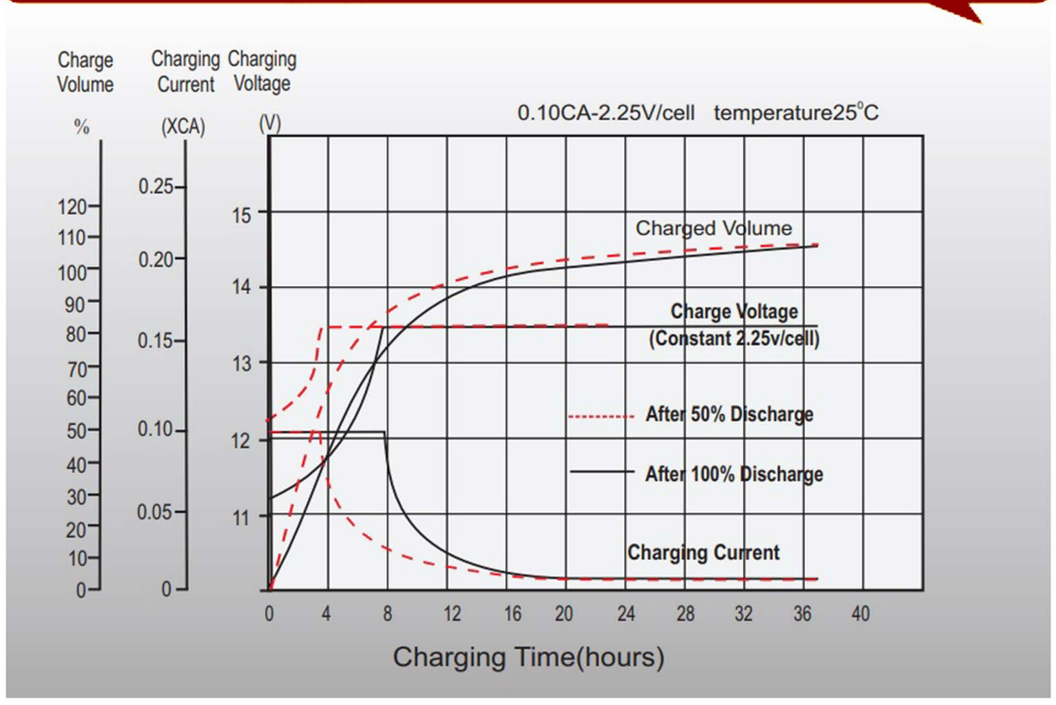

Temperature Effects in Relation to Battery Capacity

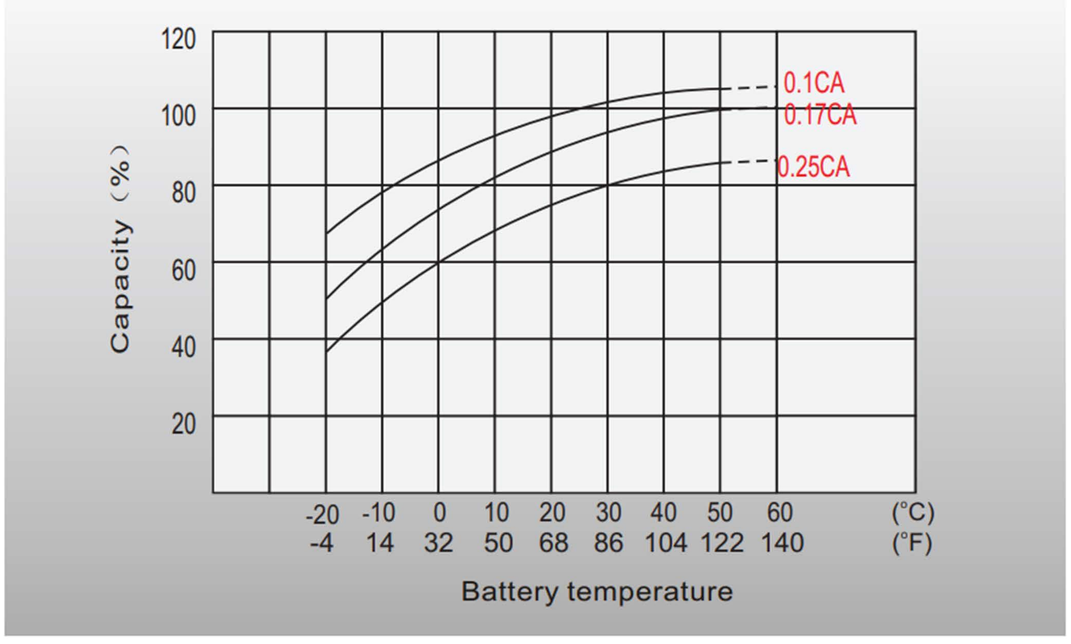

Float Service Life

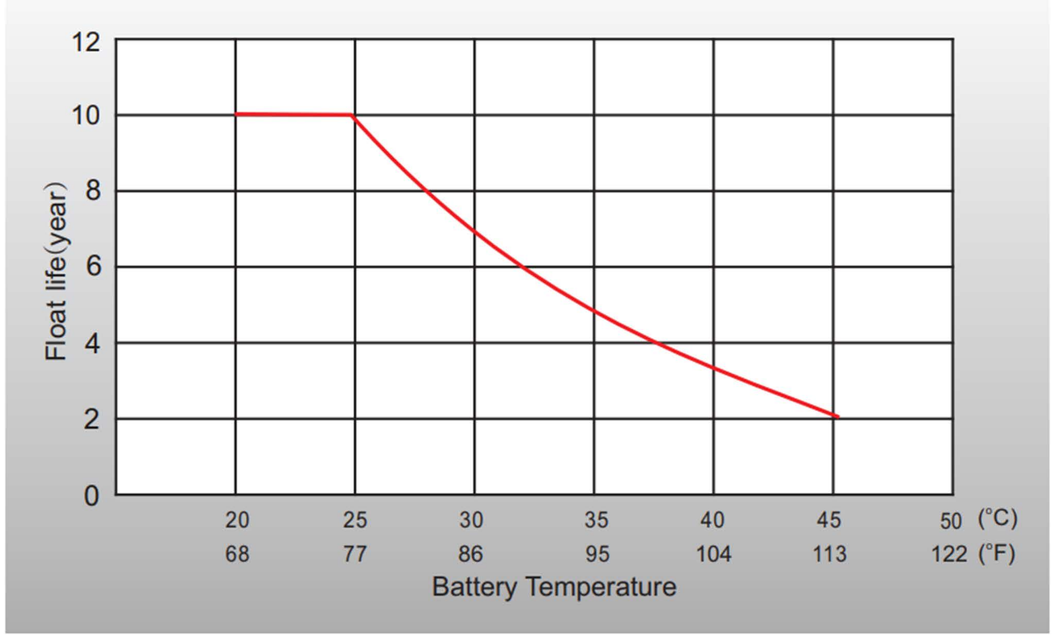

2022 RYOTA. All rights reserved.
Trademarks and logos are the property of RYOTA and its affiliates unless otherwise noted.
Subject to revisions without prior notice.

www.ryotapower.com